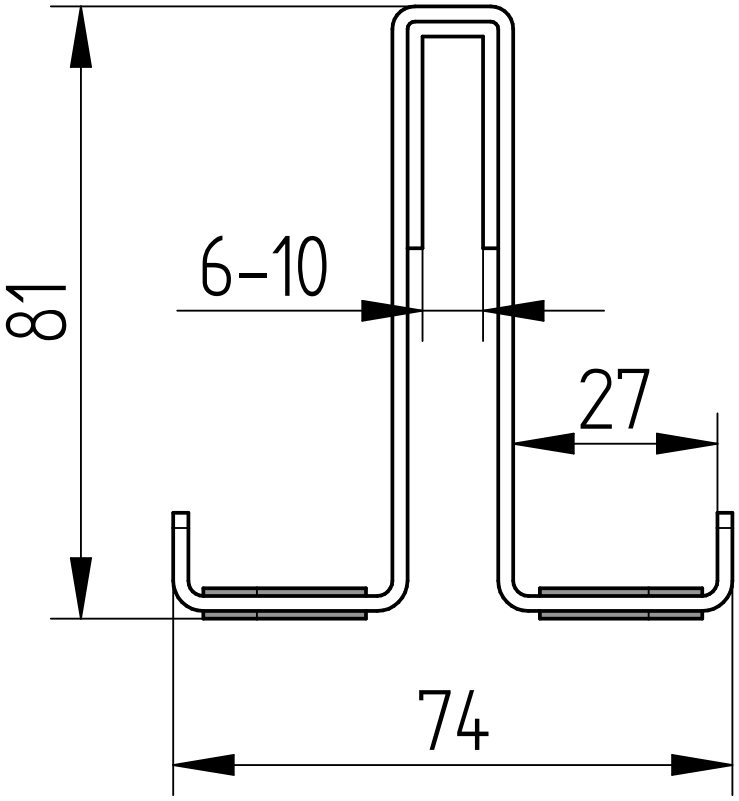
81
6–10
27
74

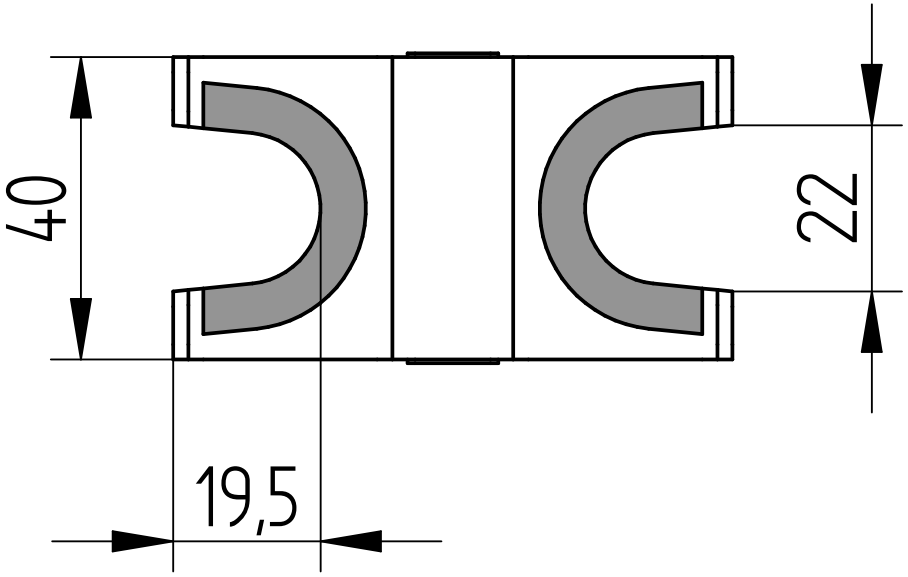
40
22
19,5