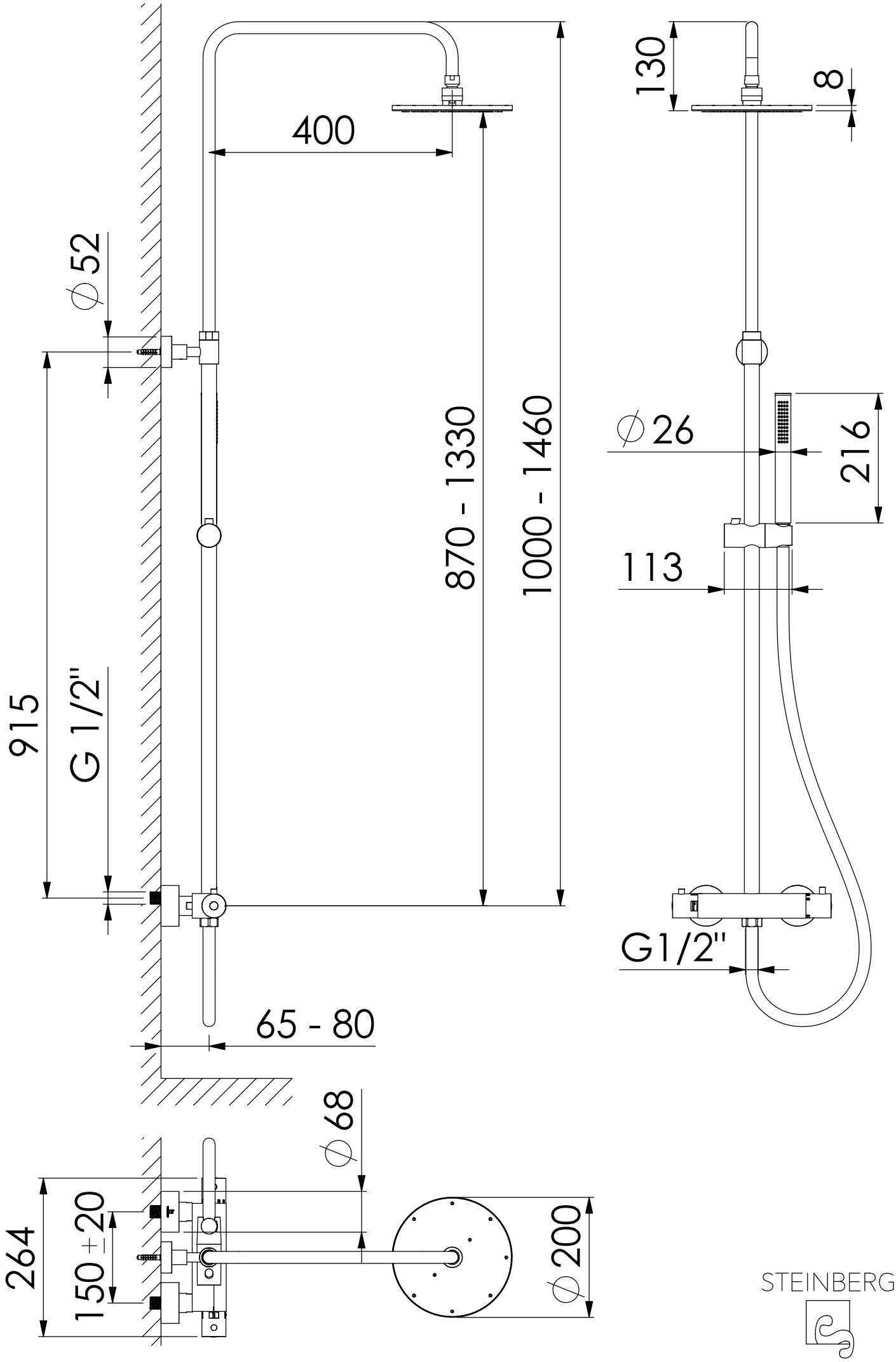
400
130
8
∅52
∅26
216
870 - 1330
1000 - 1460
113
915
G 1/2"
G1/2"
65 - 80
∅68
264
150 ± 20
∅200
STEINBERG